Digital Electronics (EC2L004)

Lecture 22: Digital Logic Families

Learning Objectives

- Concept of logic family
- Various Logic families
- Metrics to compare logic families

Introduction

- Integrated circuits are classified based on the "*circuit technology*" to which they belong where circuit technology is referred to as a "*digital logic family*".

- The basic circuit in each technology is a "NAND", "NOR", or INV gate.

- Technology is named based on the electronic components used in that technology.
  - RTL
  - DTL
  - TTL
  - ECL
  - MOS/CMOS

Introduction

- Each logic family differ in the specific electrical characteristics of the basic gate from which the circuit is constructed.

- In “Positive Logic”, a logic low “L” means “0” and logic high “H” means 1.

- In “Negative Logic”, a logic low “L” means 1 and logic high means “H” means “0”.

Positive-Logic “NAND” gate

Inputs		Output
x	y	z
L	L	H
L	H	H
H	L	H
H	H	L

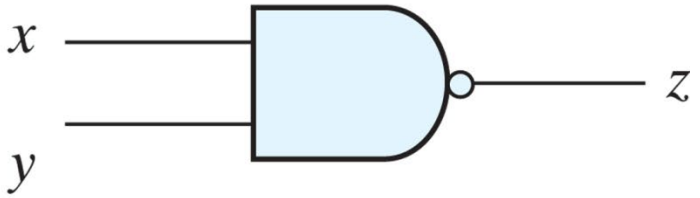

Positive-Logic “NOR” gate

Inputs		Output
x	y	z
L	L	H
L	H	L
H	L	L
H	H	L

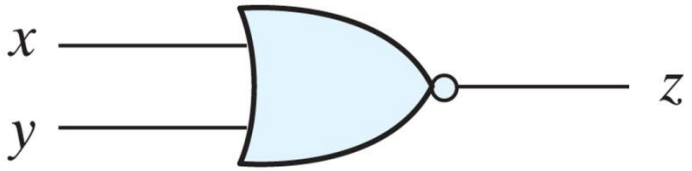

Special Characteristics

- Logic families are compared by analyzing the circuit of the basic gate in each family.

- The important parameters that are evaluated and compared are
    - Fan-out
    - Power dissipation
    - Propagation delay, and
    - Noise margin.

Fan-out

- The fanout of a gate specifies the number of standard loads that can be connected to the output of the gate without degrading its normal operation.

- A standard load is defined as the amount of current needed by an input of another gate in the same logic family.

- Fan-out also sometimes referred to as “loading”.

- Fanout specifies the maximum amount of loading allowed for each circuit in the family.

Fan-out

- The fan-out is the maximum number of inputs that can be connected to the output of a gate and is expressed by a number.

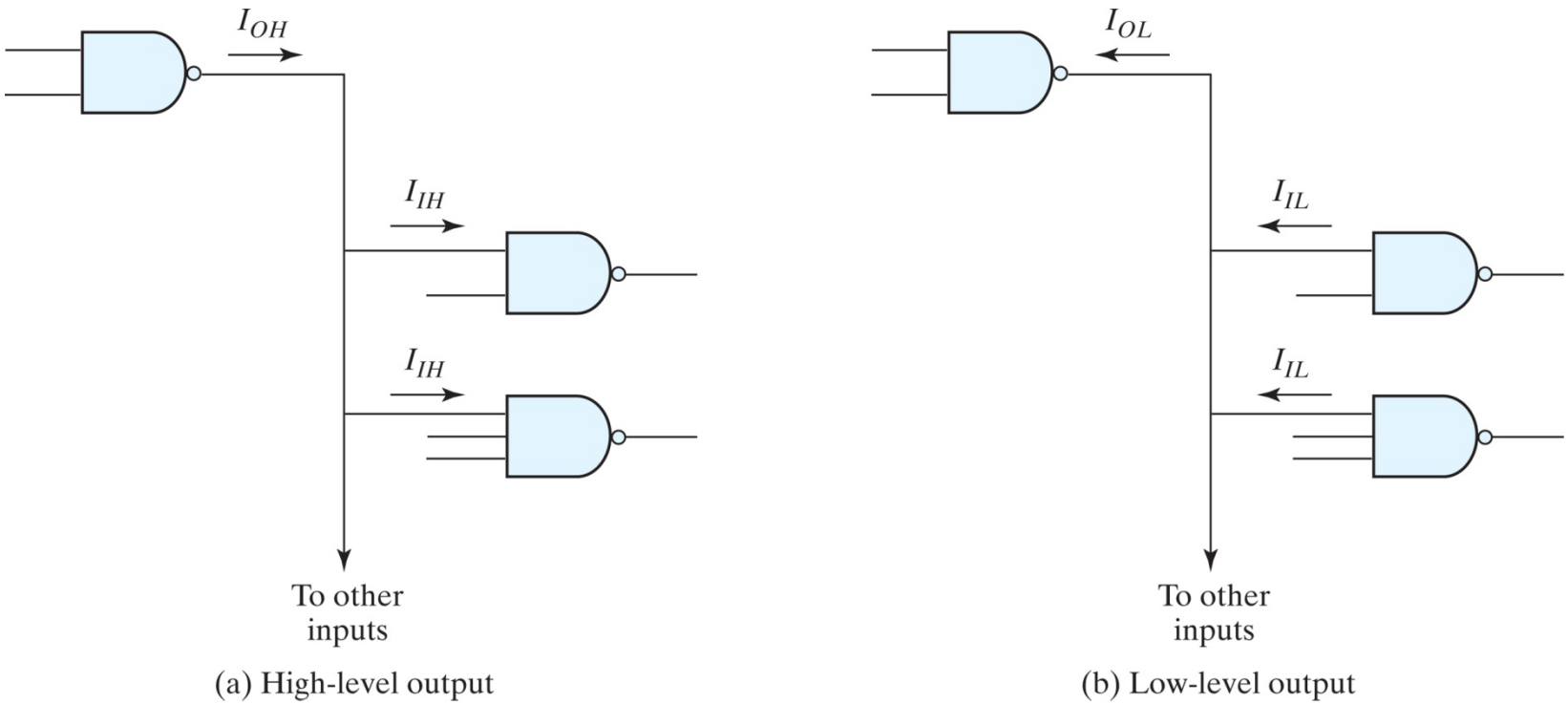

Power Dissipation

- The amount of power needed by gate, expressed in (*mW*).

- The power is the product $\mathrm{VCC} * ICC$; however, the current drain from the power supply depends on the logic state of the gate.

  - The average current

$$I_{cc}(avg) = \frac{I_{CCH} + I_{CCL}}{2}$$

  - $P_D(avg) = I_{CC}\,(avg) \times V_{CC}$

Propagation Delay

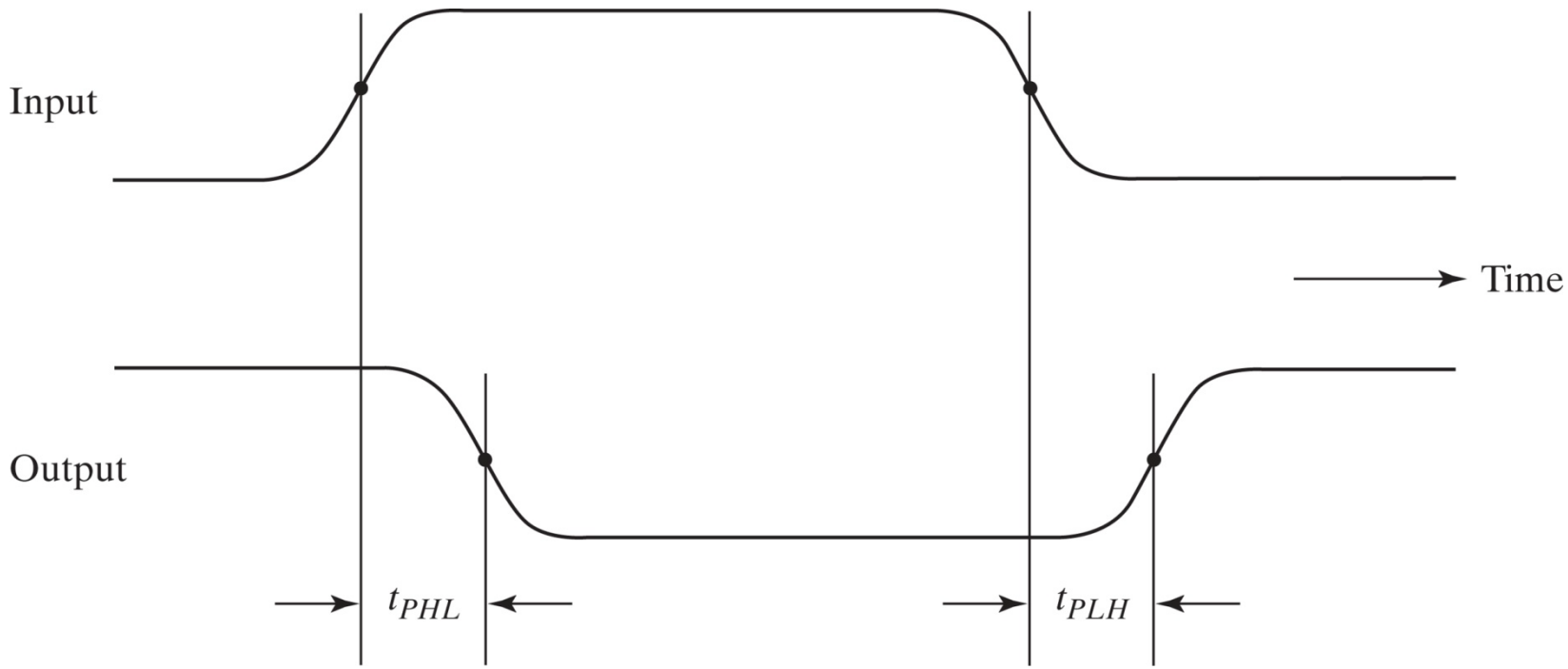

It is an average transition-delay time for the signal to propagate from input to output when the binary input signal changes in value.

$$t_{pd} = \frac{t_{PHL} + t_{PLH}}{2}$$

Noise Margin

- It is the maximum noise voltage added to an input signal of a digital circuit that does not cause an undesirable change in the circuit's output.

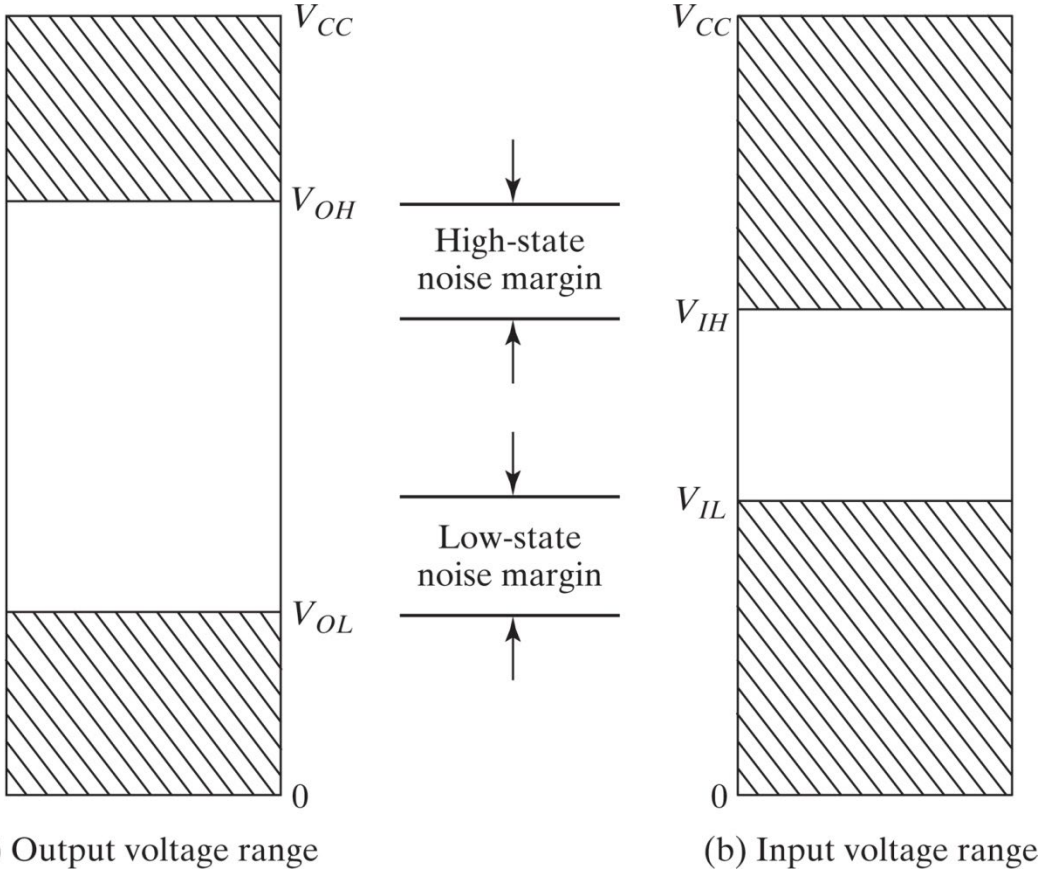

(a) Output voltage range (b) Input voltage range

RTL NOR Gate

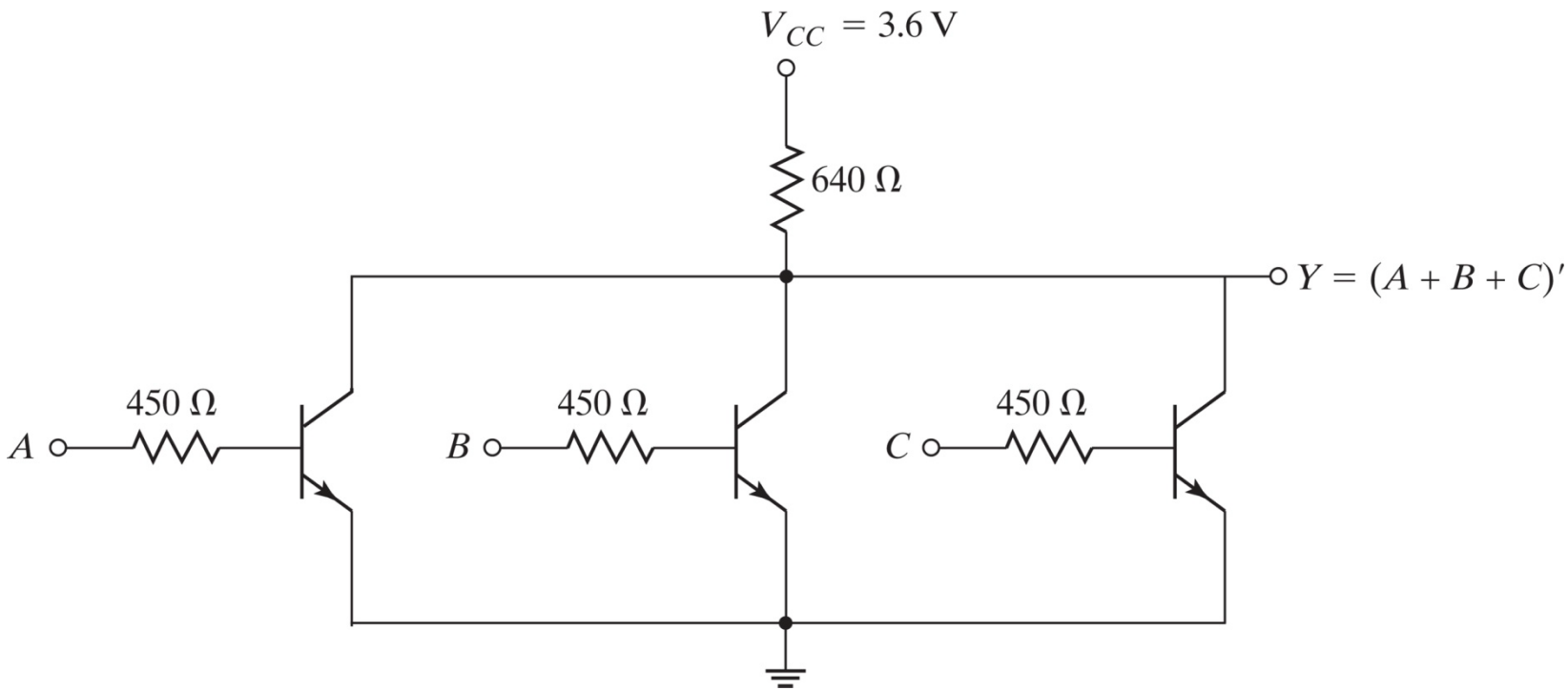

DTL NAND Gate

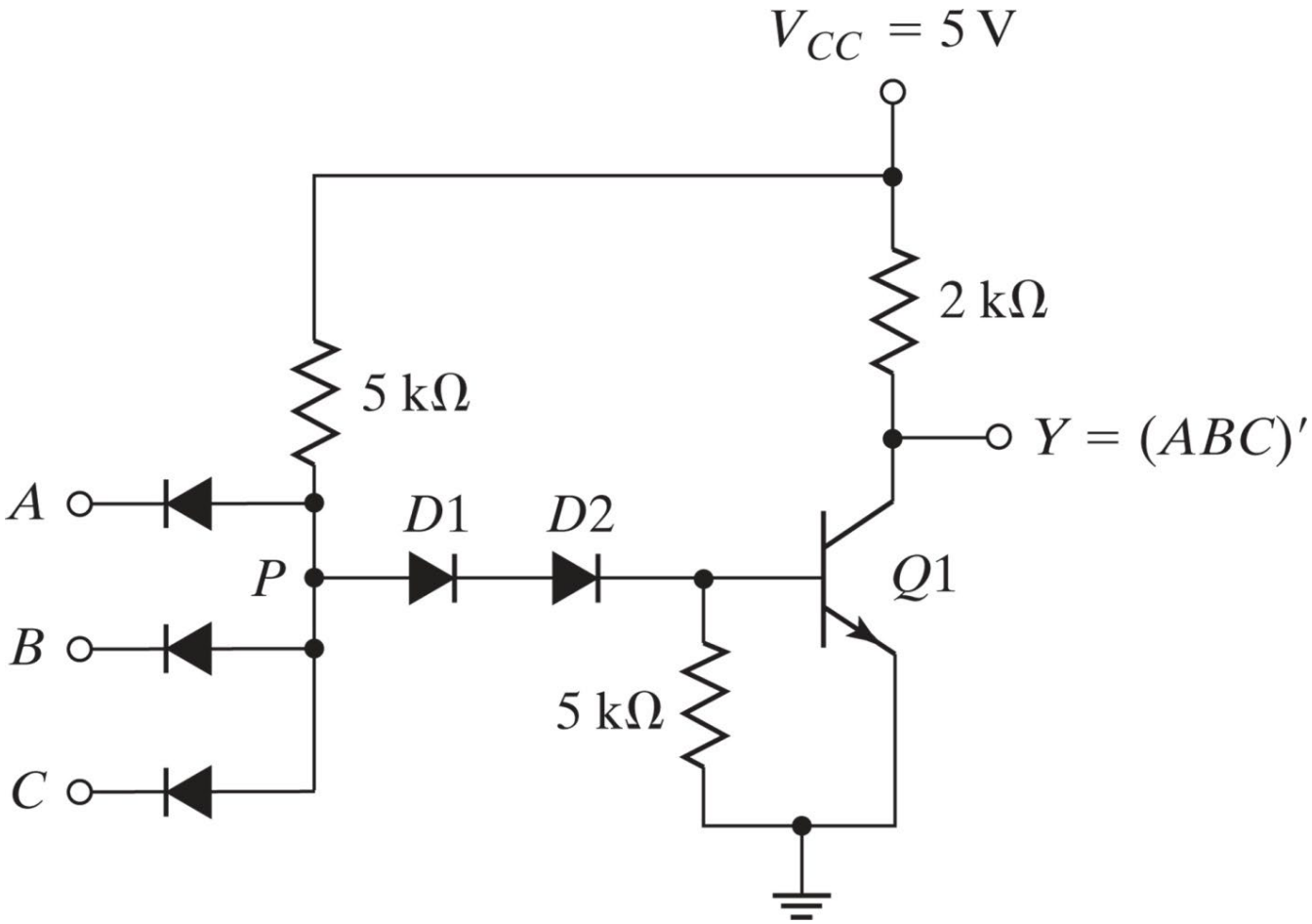

TTL Logic

- Open-collector TTL NAND gate

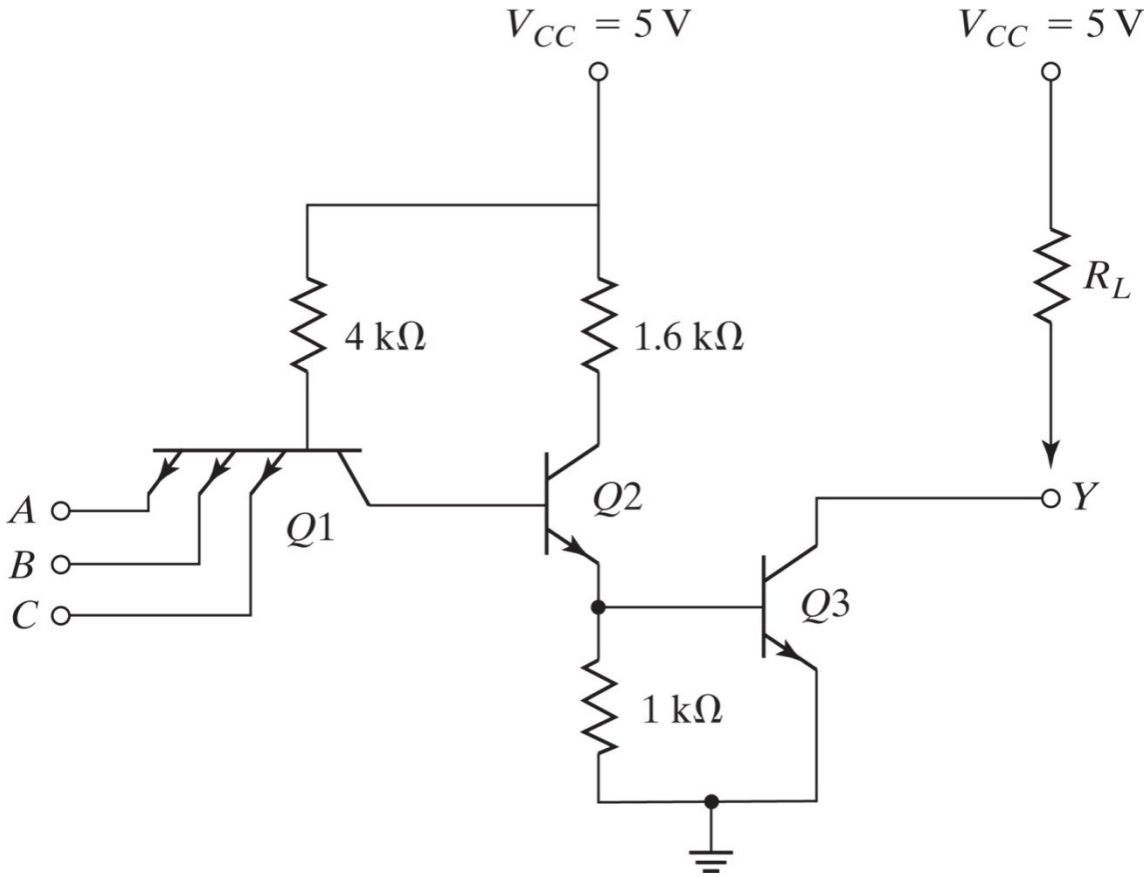

TTL Logic

- TTL Logic with Totem-Pole output

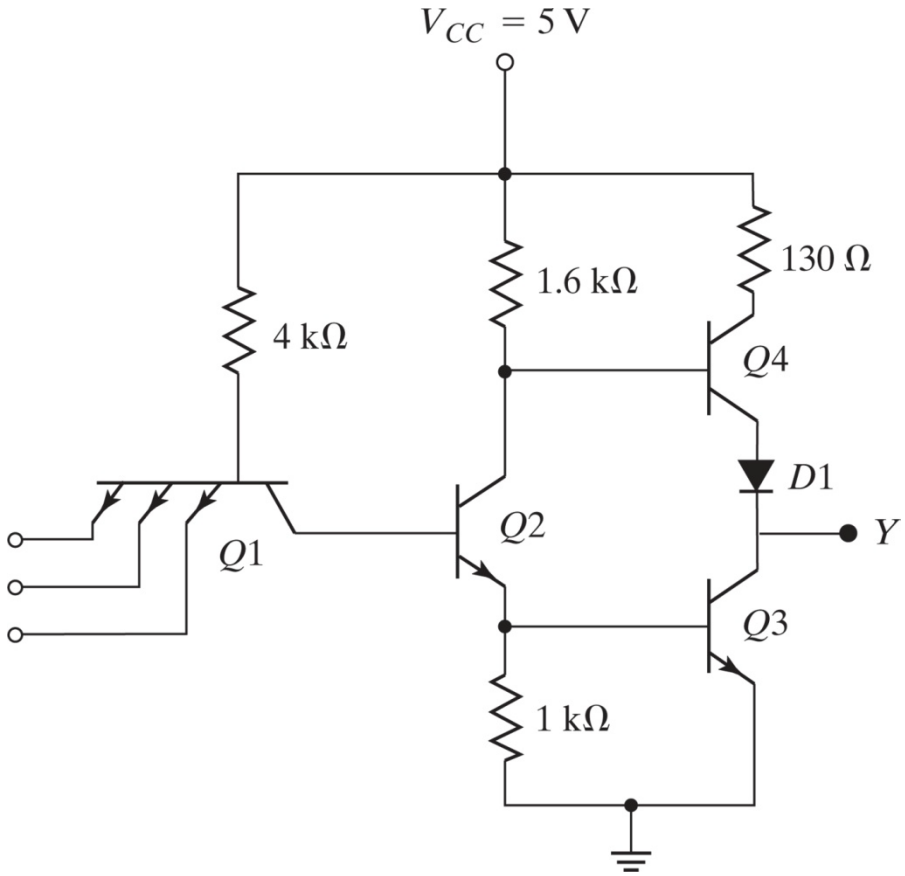

MOS Transistors

- There are four basic type of MOS structures:
  - Channel type:
    - P or n type
  - Mode of operation
    - Enhancement /Depletion

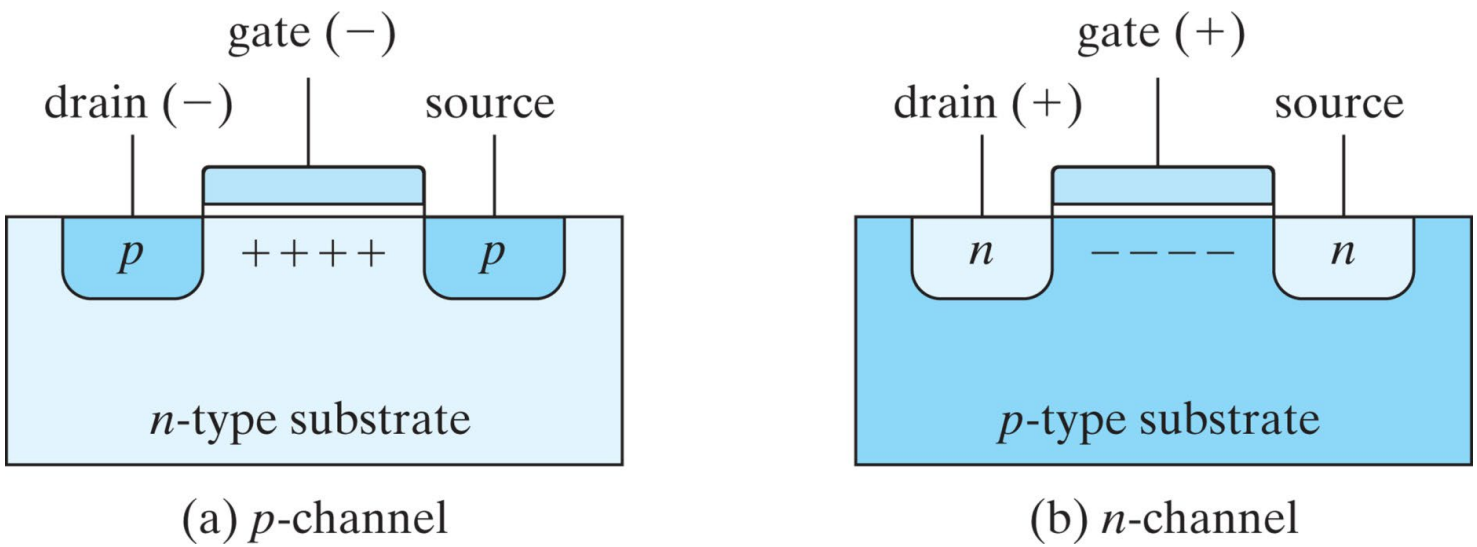

(a) p-channel (b) n-channel

N-MOS Logic Circuits

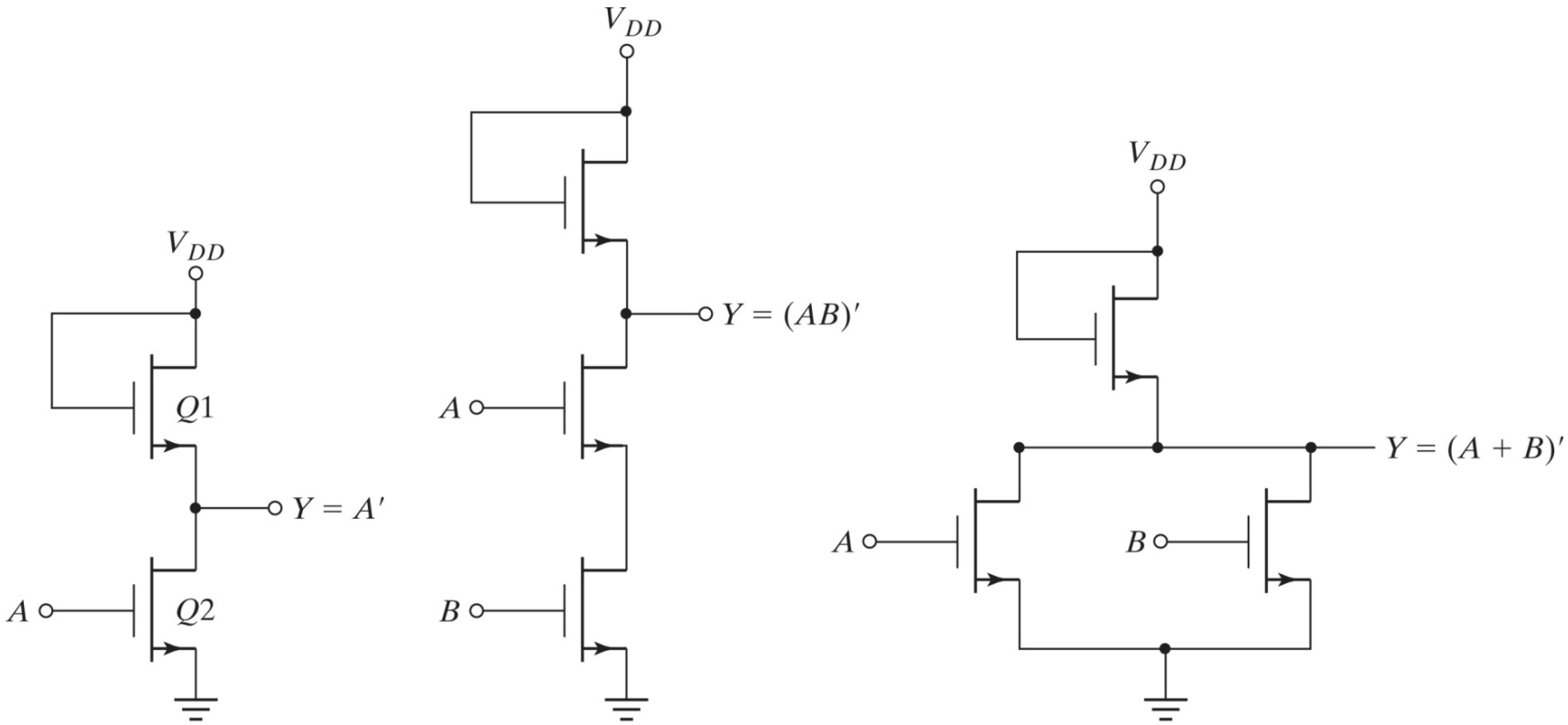

(a) Inverter (b) NAND gate (c) NOR gate

CMOS Logic Circuits

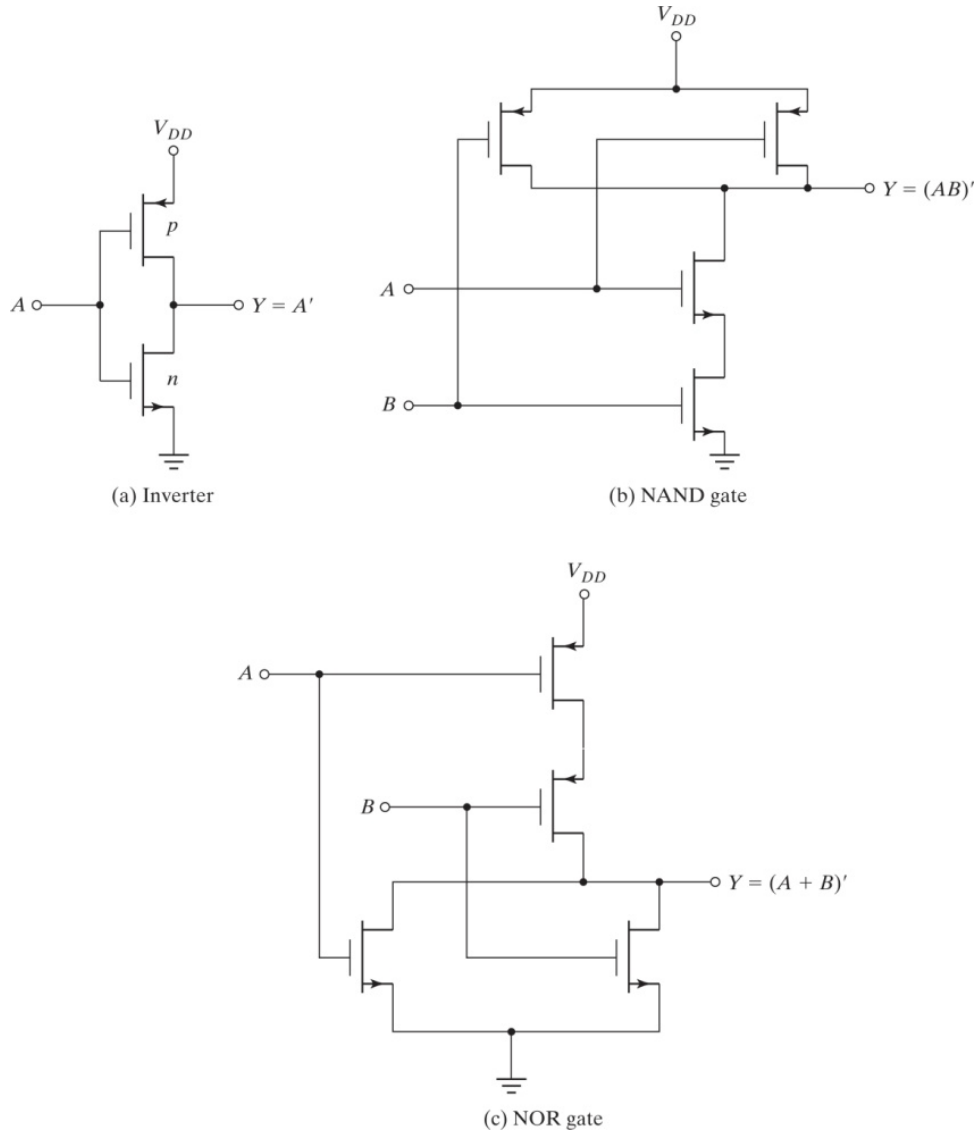

In static state, its power dissipation is very low.

CMOS Transmission Gates

- A special CMOS circuit that is not available in the other digital logic families.

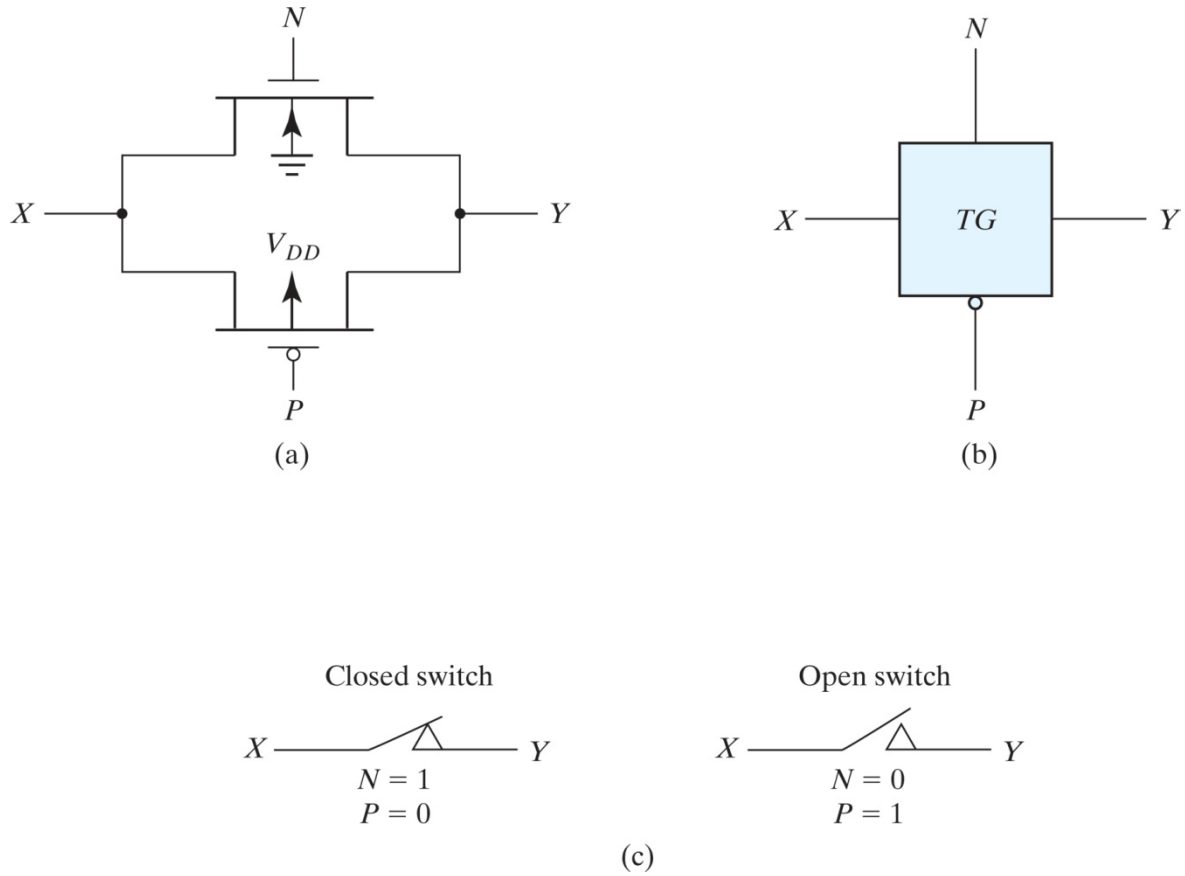

CMOS Transmission Gates

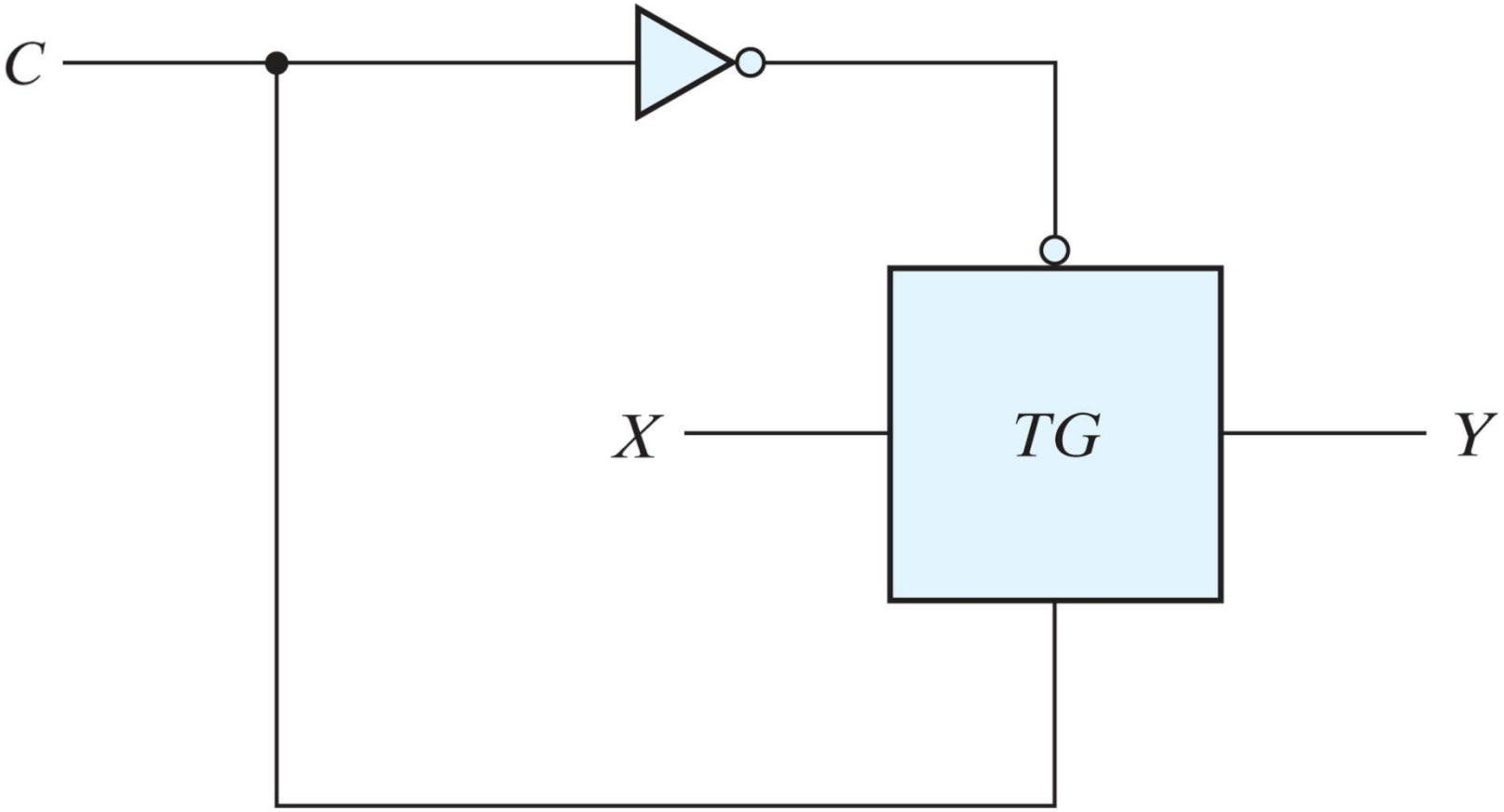

XOR with TGs

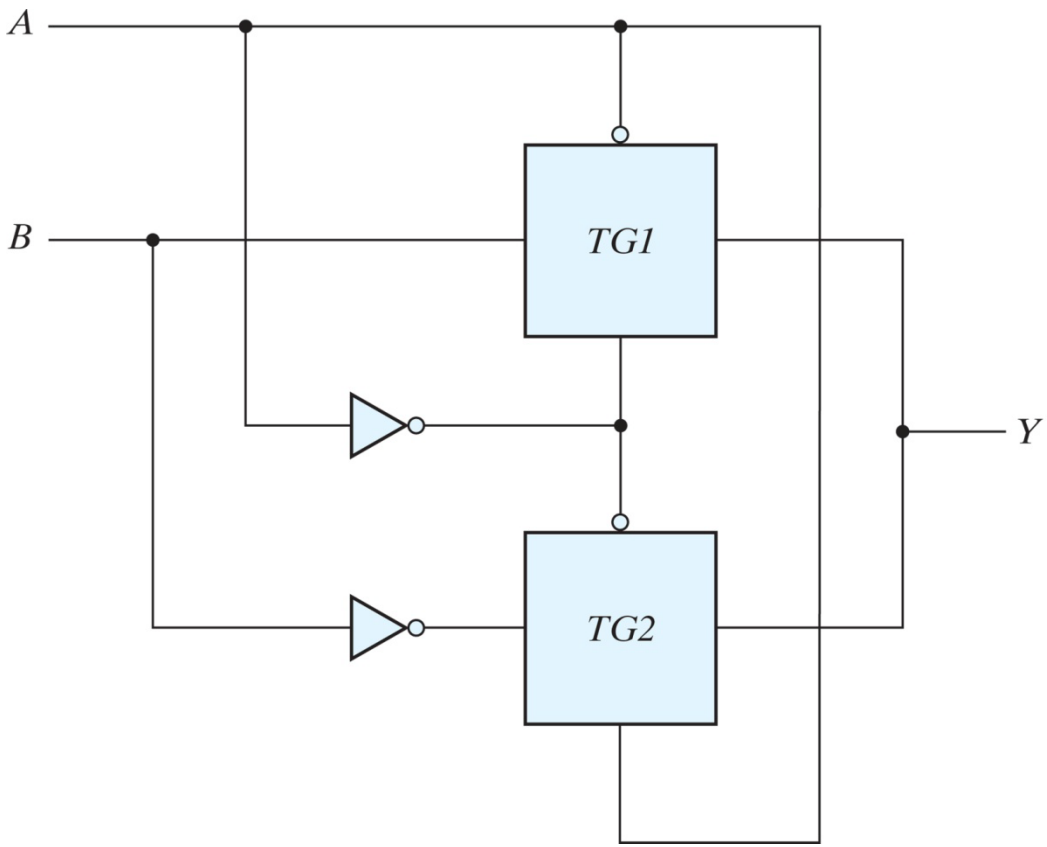

A	B	TG1	TG2	Y
0	0	close	open	0
0	1	close	open	1
1	1	open	close	1
1	0	open	close	0

Mutiplexer with TGs

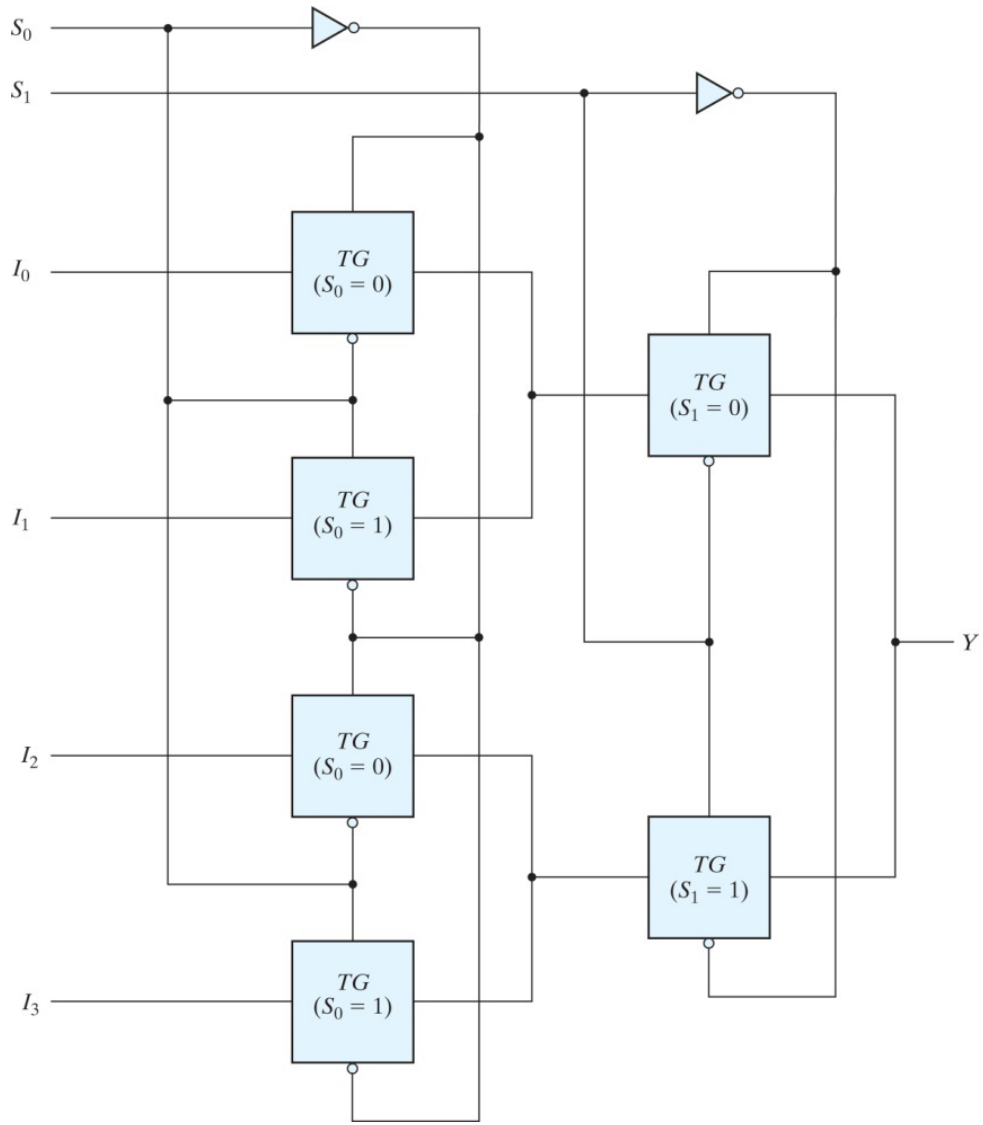

Gated D-Latch with TG

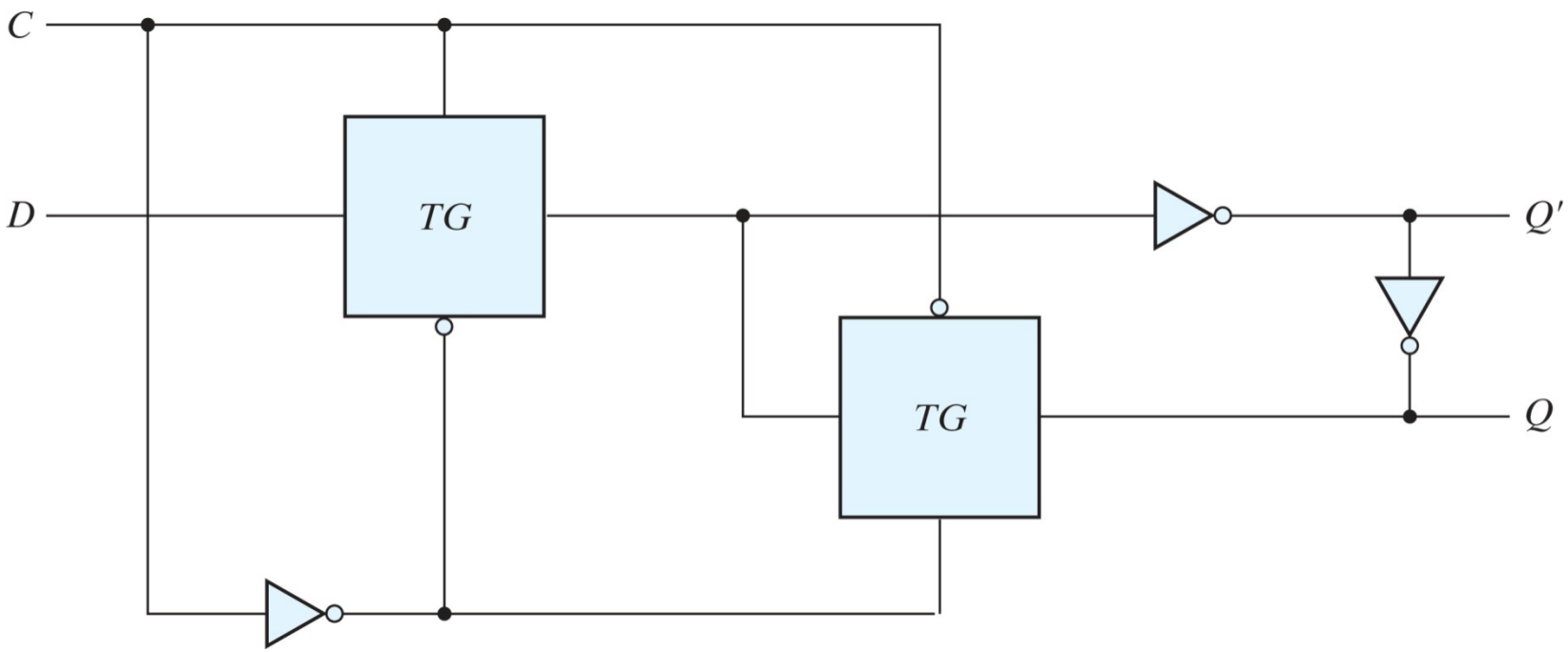

Thank you